SAFETY CHARACTERISTICS	O
SIGNIFICANT CHARACTERISTICS	8

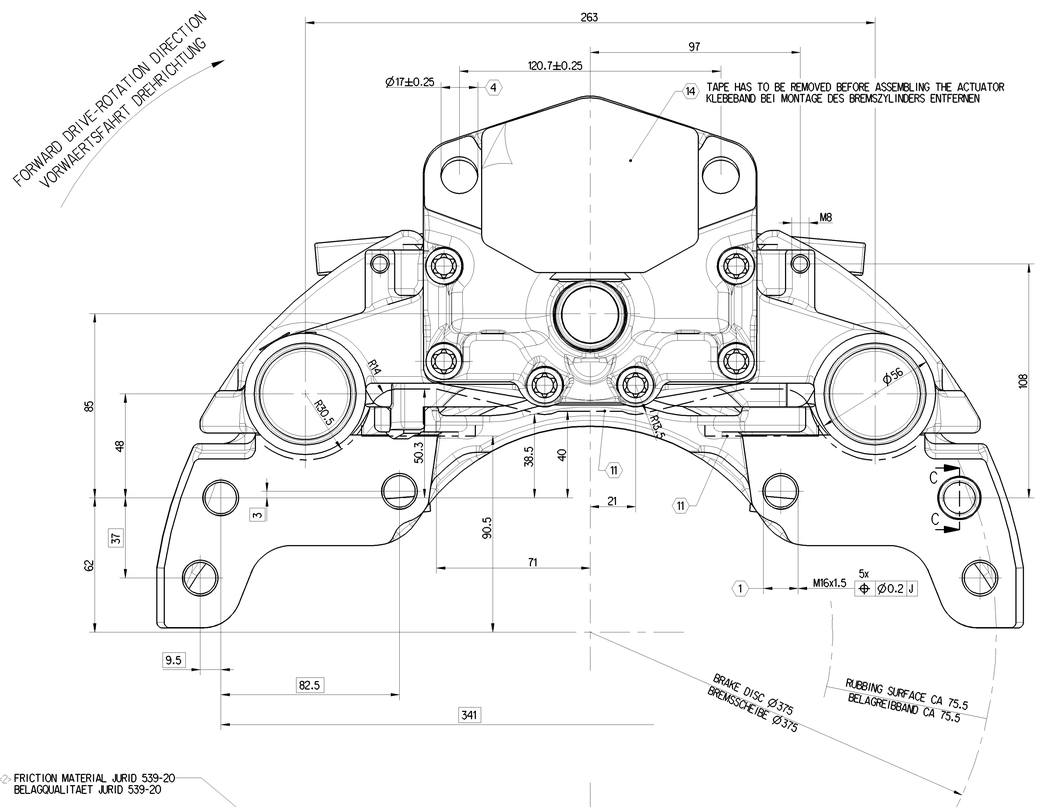

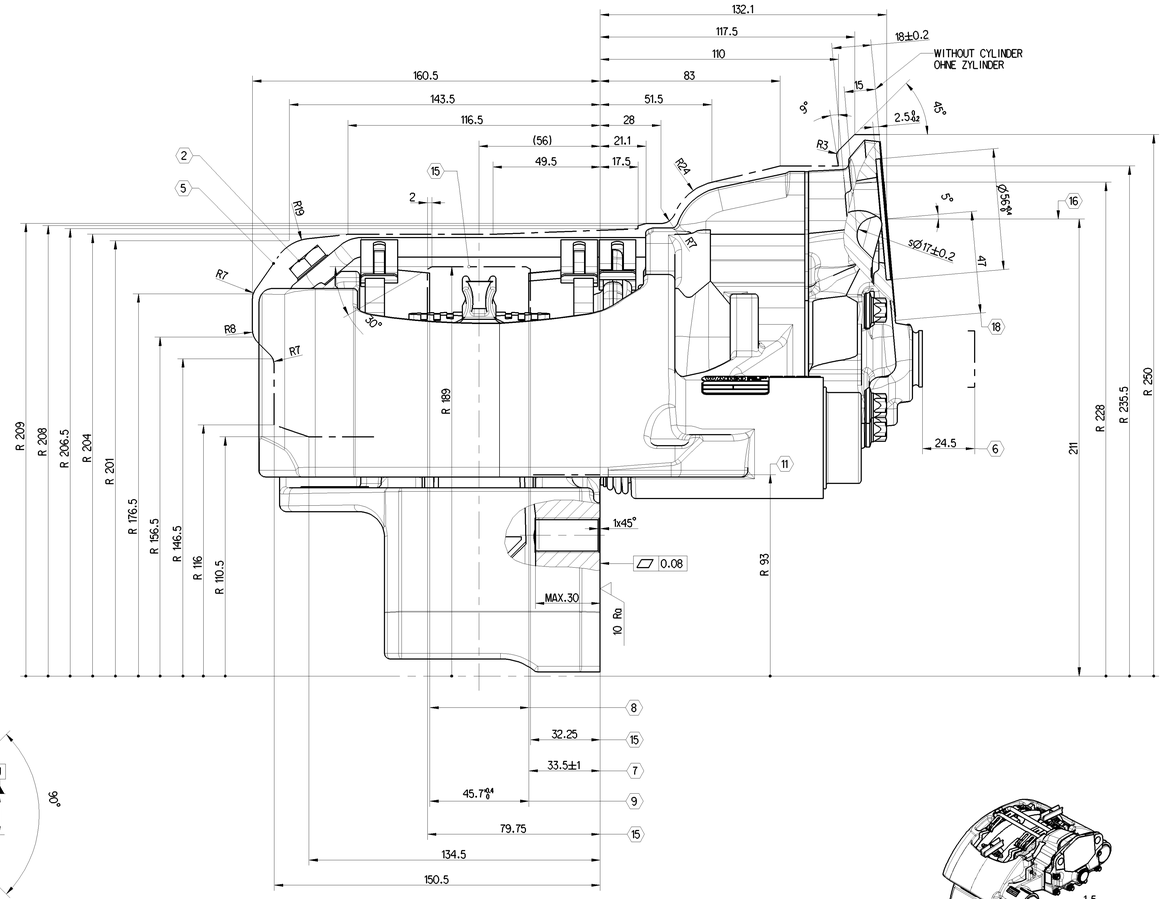

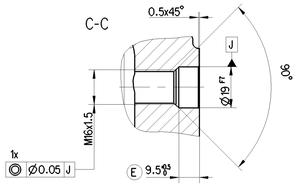

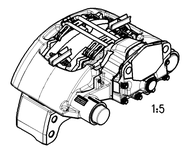

E FRICTION MATERIAL JURID 539-20
BELAGQUALITAET JURID 539-20

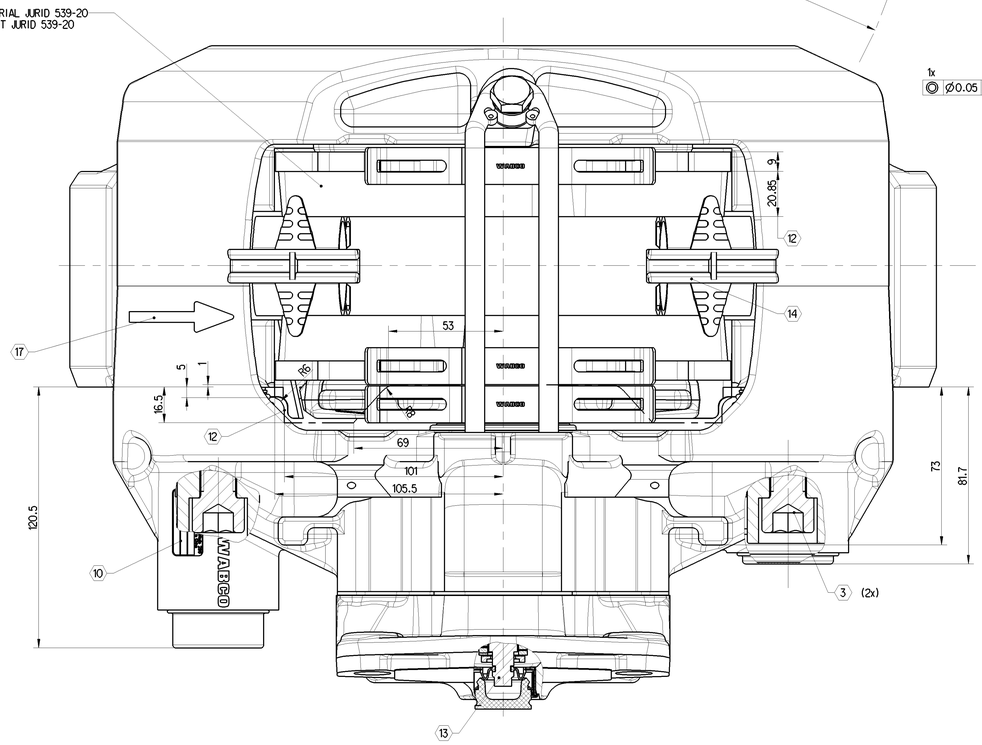

		TIGHTENING TORQUE ANZIEHDREHMOMENT	WIDTH OVER FLATS SW	NOTE BEMERKUNG	
E	1	290 ± 20 Nm (FOR CUSTOMER INFORMATION)	24 DIN 961 23 ISO 8676	BRAKE MOUNTING HEXAGON SCREW, OILED M16 X 1.5 X ... - 10.9	BREMSENBEFESTIGUNG SECHSKANTSCHRAUBE, GEOELT M16 X 1.5 X ... - 10.9
E 2	2	30 + 15 Nm	17	PAD HOLD DOWN DEVICE DIN 933 - M10X20 - 8.8 MICROENCAPSULATED	BUEGELBEFESTIGUNG DIN 933 - M10X20 - 8.8 MIKROVERKAPSELT
E 2	3	340 ± 20 Nm	14	TIGHTENING ORDER 1. LONG BOLT 2. SHORT BOLT DIN 912-M16x1.5x60-12.9	ANZIEHREIHENFOLGE 1. BOLZEN LANG 2. BOLZEN KURZ DIN 912-M16x1.5x60-12.9
E	4	210 -30 Nm (FOR CUSTOMER INFORMATION)	24	OPERATION CYLINDER M16X1.5	BETAETIGUNGSZYLINDER M16X1.5

E 2 5 MAX. STATICAL ROTARY OUTLINE
MAXIMALE STATISCHE ROTATIONSKONTUR

E 2 6 MAX. DISPLACEMENT
MAXIMALE VERSCHIEBUNG

7 FITTING DIMENSION OF THE DISC
SCHEIBENEINBAUMASS

8 BRAKE DISC NEW 45-0.2. WEARABLE UP TO 37
BREMSSCHEIBE NEU 45-0.2. VERSCHLEISSBAR BIS 37

E 2 9 ASSEMBLY DIMENSION FOR BRAKE PADS
EINBAUMASS FUER BREMSBELAEGE

10 DETAILED INFORMATION FOR MARKING SEE 640 175 060 0 DOC. CODE 922
DETAILLIERTE INFORMATIONEN ZUR KENNZEICHNUNG SIEHE 640 175 060 0 DOC. CODE 922

11 ENVELOPE CIRCLE CALIPER WITH COVER
HUELLKURVE BREMSSATTEL MIT DECKEL

12 REMAINING LINING THICKNESS 2
RESTBELAGSTAERKE 2

13 HEXAGON WIDTH OVER FLATS 8 mm
SECHSKANT SW 8

14 FOR STORAGE AND SHIPMENT
FUER TRANSPORT UND LAGERUNG

E 2 15 MAXIMUM DISC CLEARANCE
SCHEIBENFREIGANG

16 CENTER LINE CYLINDER
MITTE ZYLINDER

E 2 17 FORWARD DRIVE - ROTATION DIRECTION
VORWAERTS DREHRICHTUNG

18 BRAKE ACTUATOR SIZE RESTRICTION SEE PRODUCT SPECIFICATION
640 195 000 0 MAX. ACTUATOR TYPE 24
ZYLINDERANSCHLUSSMASSE NACH PRODUKT SPEZIFIKATION
640 195 000 0 MAX. ZYLINDER TYP 24

640 195 110 0		MIRROR IMAGE SPIEGELBILD
640 195 109 0		AS SHOWN WIE GEZEICHNET
IDENT-NO BRAKE MATERIAL-NR. BREMSE	CUSTOMER NO. KUNDENNUMMER	BRAKE TYPE AUSFUEHRUNG BREMSE

PRODUKT-SPEZIFIKATION 640 195 000 0
PRODUCT-SPECIFICATION 640 195 000 0

DIMENSIONS WITHOUT TOLERANCES ARE GAUGE DIMENSIONS
NICHT TOLERIERTE MASSE = LEHRENMASSE

COATING
ANTI-CORROSION PROTECTION - SALT SPRAY TEST MIN. 96 HOURS
BESCHICHTUNG
KORROSIONSSCHUTZ-SALZSPRUEHNEBELPRUEF. MIN. 96 STD.

PAN 19-1

General Specifications: JED-354-1 , Size ISO 14405 LP
Further Technical Data:
Doc. Code: | Sheet: | To:
General Tolerances JED-261

Class 1)	Range of Nominal Dimensions (in mm) ≥ 50	> 50 ≥ 180	> 180 ≥ 400	> 400	∢
Fine	0.5	1.0	1.5	2.0	
Medium	1.0	2.0	3.0	4.0	±3°
Coarse	2.0	3.5	5.0	6.5	

Tapped Holes acc.
1) Tolerance Class Applied Crosshatched

Copyright WABCO®

Date	Drawn	Signature
2018-01-31	Bharanitharan	
Checked 2018-03-06	Redemann	
Approved Redemann		

WABCO

DISC BRAKE PAN-RANGE LIGHT
SCHEIBENBREMSE PAN-REIHE LEICHT

Mass kg	Scale	Material No.			Date of first issue 2012-08-23
32.479	1 : 1	640 195 109 0	Doc.Code 053	Language ML	Sheet 1/1
Size A 0	CAD System CREO	ECN-No. 171726	Revision 12x E	Techn. Reg. 6921	Replacement for -

100mm

This Correspondence is reproducible in its entirety, but reproduction in non-verbatim and/or parts, not permitted without WABCO's prior written consent. Its management is only legal according to and exclusive as stated in WABCO's General Terms and Conditions (GTC) in the version valid at the time of the conclusion of the respective contract. Our employees and agents are obliged to observe data protection regulations and to treat all information and documents they receive from WABCO as confidential. Copyright of this document and being to others and the use or communication of its contents forbid, as far as not stated otherwise in WABCO's General Terms and Conditions (GTC) in the version valid at the time of the conclusion of the respective contract. Offenders will be held liable for damages. All rights are reserved in the event of the grant of a patent or registration of a utility model or design. This document is at your disposal free of charge.
Diese Korrespondenz ist vervielfältigungsfähig, soweit nicht ausdrücklich anders vereinbart, vollständig und unverändert. Jede Verwendung außerhalb der gesetzlichen Grenzen bedarf der vorherigen schriftlichen Zustimmung der WABCO. Wir behalten uns vor, Ihre Daten gemäß der Datenschutzgesetzgebung zu verarbeiten.